2016年 NOLTAソサイエティ大会
IEICE, NOLTA
東京, 2016年6月12日

Synchronization of Coupled Oscillators Containing Ring and Star

Kazuki Ueta Yoko Uwate Yoshifumi Nishio

Tokushima University

1 Introduction

Investigation of coupled oscillators focus on many researchers because the network of coupled oscillators produces interesting phase synchronization, such as the phase propagation wave, clustering and complex patterns. In this study, we focus on the phase synchronization phenomena coupled by van del Pol oscillators containing ring and star structures.

2 System Model

Figure 1 shows a system model constituted by van del pol oscilators (VDP-A and VDP-B). We couple each VDP-B via inductor L and ground by coupling resistor R. In addition, we couple VDP-A via resistor r. VDP-A is the only one central circuit which is connected to all VDP-B in this system by resistors r.

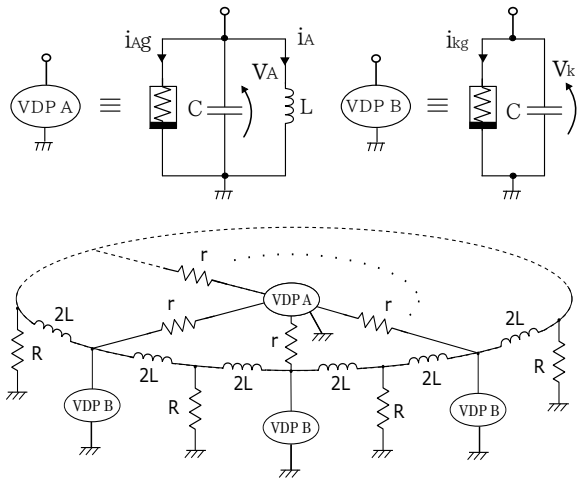

Figure 1 System model.

In the computer simulations, we assume that the voltage and current characteristics of the nonlinear resistor in each oscillator are given as follows:

$$i_g = -g_1 v + g_3 v^3, \qquad (g_1, g_3 > 0). \tag{1}$$

The charactaristic of ring coupling has in-phase, anti-phase and N-phase. The charactaristic of star coupling has in-phase and anti-phase. The normalized circuit equations of VDP-A are given as follows:

$$\begin{cases} \dot{x_A} = \alpha x_A(1 - \frac{1}{3}x_A^2) - y_A \\ \qquad +\beta(Nx_A - x_1 - x_2 ... - x_N), \\ \dot{y_A} = x_A. \end{cases} \tag{2}$$

The normalized circuit equations of VDP-B are given as follows:

$$\begin{cases} \dot{x_k} = \alpha x_k(1 - \frac{1}{3}x_k^2) - y_{ka} - y_{kb} - \beta(x_A - x_k), \\ \dot{y_{ka}} = \frac{1}{2}\{x_k - \gamma(y_{ka} + y_{k+1,b})\}, \\ \dot{y_{kb}} = \frac{1}{2}\{x_k - \gamma(y_{ka} + y_{k-1,b})\}. \end{cases} \tag{3}$$

3 Simulation Results

We show the simulation results of the synchronization phenomena when N = 5 in Fig. 2. In this figure, We show the time waveform of each oscillator. We set the parameters $\alpha = 0.1$, $\gamma = 0.02$, and increasing β, which is the coupled strength of the star.

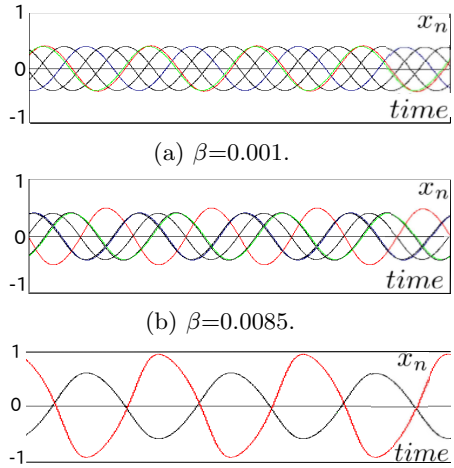

(a) β=0.001.

(b) β=0.0085.

(c) β=0.05.

Figure 2 Simulation Results for N=5. The horizontal axis represents timescale.

4 Conclusions

We have observed the synchronization phenomena by increasing the coupling strength of the star. When the coupling strength is sufficiently small, the system model becomes similar function of the ring. Therefore, N-phase synchronization can be observed. By increasing the coupling strength, time waveform of all VDP-B have come close to in-phase synchronization. When the coupling strength is sufficiently large, time waveforms of VDP-A and VDP-B become anti-phase.

5 Reference

H. Kume, Y. Uwate and Y. Nishio, "Synchronization Phenomena in Different Sizes of Rings of Coupled Oscillators", NOLTA'14, pp. 369-372, Sep. 2014.