1-37

Synchronization Phenomena in Five Coupled van der Pol Oscillators with Frequency Errors

Kentaro KAISHIMA, Takahiro NAGAI, Yoko UWATE and Yoshifumi NISHIO
(Tokushima University)

1. Introduction

Studies on synchronization phenomena of coupled oscillators are extensively carried out in various fields. We consider that it is important to investigate the synchronization phenomena of coupled oscillators for the future engineering applications. In this study, we investigate synchronization phenomena observed in five coupled van der Pol oscillators with frequency errors. We focus on the relationship between synchronization state and the frequency error when the coupling strength is changed.

2. Circuit Model

Figure 1 shows the circuit model. In the circuit model, five van der Pol oscillators are completely coupled by resistor R. Each oscillator has the frequency error which is defined as $\Delta\omega_k$.

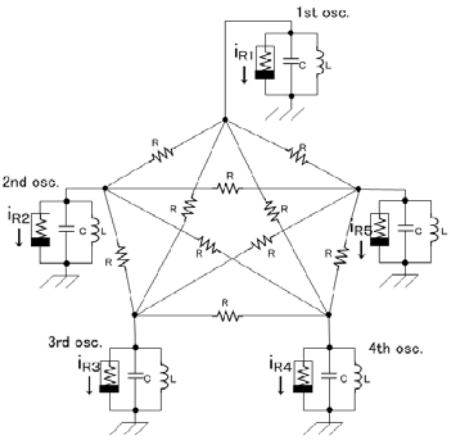

Figure 1: Circuit Model.

The $v-i$ characteristics of the nonlinear resistor are approximated by the following equation.

$$i_{Rk} = -g_1 v_k + g_3 v_k^3. \tag{1}$$

By changing the variables and the parameters,

$$v_k = \sqrt{\frac{g_1}{g_3}} x_k, \qquad i_k = \sqrt{\frac{g_1 C}{g_3 L}} y_k, \qquad t = \sqrt{LC}\tau,$$
$$\varepsilon = g_1 \sqrt{\frac{L}{C}}, \qquad \gamma = \frac{1}{R}\sqrt{\frac{L}{C}} \tag{2}$$

where ε is nonlinearity and γ is coupling strength. The normalized circuit equations are given as follows.

$$\begin{cases} \dfrac{dx_k}{d\tau} = (1+\Delta\omega_k)\varepsilon(1-x_k^2)x_k - y_k - \gamma \displaystyle\sum_{k=1}^{5} x_k \\ \dfrac{dy_k}{d\tau} = x_k \end{cases} \tag{3}$$

$$(k = 1,\ 2, \cdots,\ 5)$$

3. Simulation Result

For the computer simulations, we set the parameters as follows; $\varepsilon = 0.1$ and $\max\{\Delta\omega\}$=0.05. In this section, we investigate synchronization state when the coupling strength is changed. Figure 2 shows the computer simulation results of attractors, phase differences and time wave forms for $\gamma = 0.025$. In this case, all oscillators synchronize even if each oscillator has frequency errors. By decreasing the value of the coupling strength to $\gamma = 0.001$, the interesting synchronization states is observed as shown in Fig. 3. Namely, three oscillators which have similar oscillation frequency could synchronize and the other two oscillators could not synchronize.

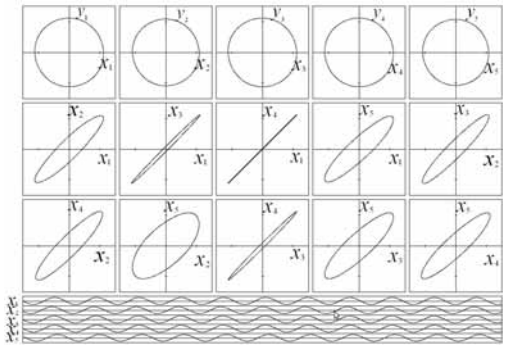

Figure 2: Attractors, phase differences and time waveforms (synchronization). $\gamma = 0.025$.

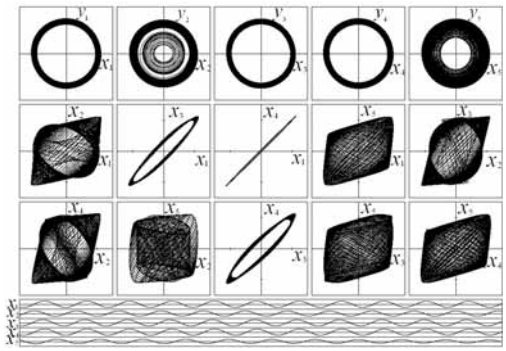

Figure 3: Attractors, phase differences and time waveforms (asynchronization). $\gamma = 0.001$.

4. Conclusions

In this study, we have investigated synchronization phenomena observed in five coupled van der Pol oscillators with frequency errors. By using computer simulations, the several types of the interesting synchronization states were observed.