2009 IEEE Workshop on
Nonlinear Circuit Networks, Tokushima, Dec 11-12, 2009

Investigation of Synchronization Phenomenon in Coupled Chaotic Circuits and Coupled Cubic Maps

Yumiko Uchitani
Dept. Electrical and Electronic Eng.,
Tokushima University
Email: uchitani@ee.tokushima-u.ac.jp

Yoshifumi Nishio
Dept. Electrical and Electronic Eng.,
Tokushima University
Email: nishio@ee.tokushima-u.ac.jp

I. Introduction

Synchronization phenomena in complex systems are very good models to describe various higher-dimensional nonlinear phenomena in the field of natural science. We consider that it is very important to investigate the phenomena related with chaos synchronization to realize future engineering application utilizing chaos.

In our past studies [1]-[3], two Shinriki-Mori circuits [4][5] cross-coupled by inductors are investigated. As a result, we could observe several synchronization phenomena by changing initial conditions On the other hand, the cubic map has two attractors located symmetrically with respect to the origin and they merge as increasing a control parameter. Such bifurcations are similar to those observed from Shinriki-Mori circuit.

In this study, we compare the synchronization behaviors of cross-coupled chaotic circuits and the coupled chaotic maps.

II. Cross-coupled chaotic circuits [1]-[3]

In this section, we review the phenomena observed from the two cross-coupled chaotic circuits. Figure 1 shows the cross-

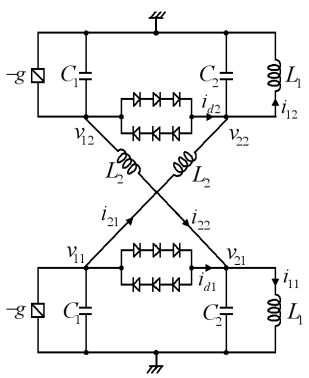

Fig. 1. Circuit model.

coupled chaotic circuits. In this model, two simple autonomous chaotic circuits called as Shinriki-Mori circuit [4][5] are cross-coupled via inductors L_2. The normalized circuit equations are given as follows where δ is a coupling parameter.

$$\begin{cases} \dot{x}_1 = z_1 \\ \dot{x}_2 = z_2 \\ \dot{y}_1 = \alpha\{\gamma y_1 - w_1 - \beta f\,(y_1 - z_1)\} \\ \dot{y}_2 = \alpha\{\gamma y_2 - w_2 - \beta f\,(y_2 - z_2)\} \\ \dot{z}_1 = \beta\, f(y_1 - z_1) + w_2 - x_1 \\ \dot{z}_2 = \beta\, f(y_2 - z_2) + w_1 - x_2 \\ \dot{w}_1 = \delta(y_1 - z_2) \\ \dot{w}_2 = \delta(y_2 - z_1) \end{cases} \tag{1}$$

where f are the nonlinear functions corresponding to the $v - i$ characteristics of the nonlinear resistors consisting of the diodes and are assumed to be described by the following 3-segment piecewise-linear functions:

$$f(y_k - z_k) = \begin{cases} y_k - z_k - 1 & (y_k - z_k > 1) \\ 0 & (|y_k - z_k| \leq 1) \\ y_k - z_k + 1 & (y_k - z_k < -1) \end{cases} \tag{2}$$

From the circuit in Fig. 1, we could observe interesting state transition phenomenon. Typical examples of the observed phenomena are shown in Figs. 2. By computer simulations, we confirmed that the circuits generated many different synchronization states, by changing initial condition.

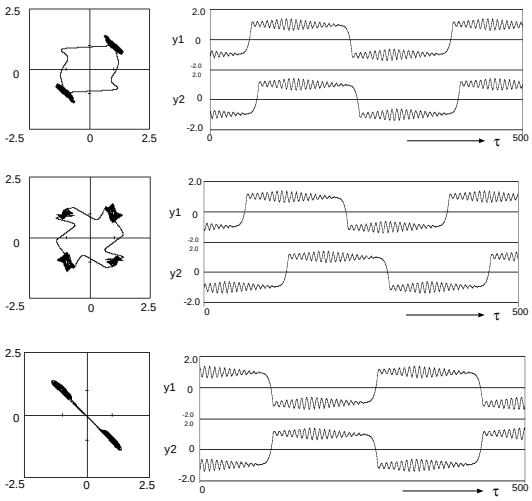

(a) (b)

Fig. 2. Some examples of different synchronization states. (computer simulation results). $\alpha = 2.0$, $\beta = 4.0$, $\gamma = 0.1$, and $\delta = 0.0014$. (a) Attractor on $y_1 - y_2$ plane. (b) Timewaveform.

III. CUBIC MAP

In this section, we consider two coupled cubic maps. Figure 3 shows the cubic map.

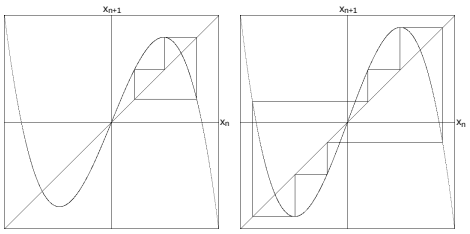

(a) (b)

Fig. 3. Cubic map. (a) $a = -3.4505$. (b) $a = -3.70$.

The cubic map is described by the following equation:

$$x_{(n+1)} = ax_{(n)}^3 - (a+1)x_{(n)} \tag{3}$$

where n is an iteration and a is a parameter which determines the chaotic feature. We can easily confirm that the cubic map generates various periodic solutions and chaos. Figure 3(a) shows asymmetric 3 periodic solution and Fig. 3(b) shows symmetric 6 periodic solution.

The followings are the equations of the coupled cubic maps where ϵ is a coupling parameter.

$$\begin{cases} g(x_{(n)}) = ax_{(n)}^3 - (a+1)x_{(n)} \\ x_{1(n+1)} = (1-\epsilon)g(x_{1(n)}) + \epsilon(g(x_{2(n)})) \\ x_{2(n+1)} = (1-\epsilon)g(x_{2(n)}) + \epsilon(g(x_{1(n)})) \end{cases} \tag{4}$$

Figure 4 shows examples of the computer simulated results of Eq. (4). Figure 4(a) shows the timewaveform obtained with the parameters giving the periodic solution in Fig. 3(a) and a negative coupling strength. In the same way, Fig. 4(b) shows the timewaveform obtained with the parameters giving the periodic solution in Fig. 3(b) and a positive coupling strength. From the coupled cubic maps, we can observe interesting state synchronization phenomena. We could confirm that the two maps synchronize for the parameters giving periodic solutions. Similarly, we could confirm that the two maps synchronize for the parameters near that giving periodic solutions as shown in Fig. 4(c)(d). However, we do not understand the relationship between the obtainable synchronization states and symmetry property of the original solutions.

IV. COMPARISON OF SYNCHRONIZATION BEHAVIORS

In this study, we compare the synchronization behaviors of the cross-coupled chaotic circuits and coupled chaotic maps.

For the cross-coupled chaotic circuits, we can observe several synchronization phenomena by changing initial conditions. On the other hand, for the coupled chaotic maps, we can observe in-phase synchronization for the parameters giving asymmetric periodic solutions and a negative coupling strength. Further, we can observe anti-phase synchronization for the parameters giving symmetric periodic solutions and a positive coupling strength. However, we do not understand the relationship between the obtainable synchronization states and symmetry property of the original solutions.

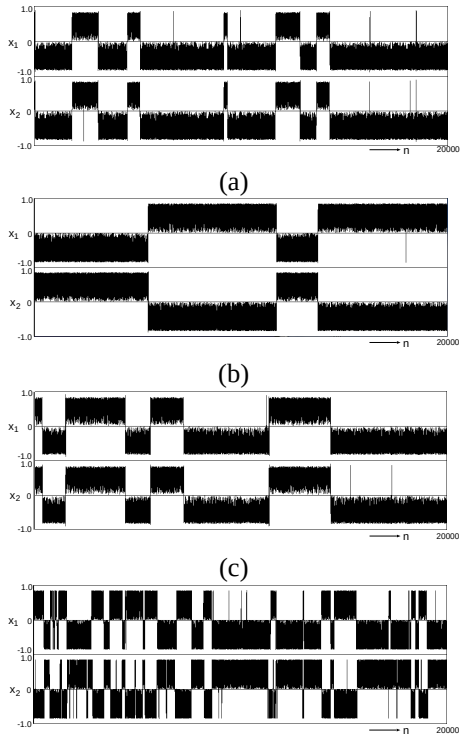

Fig. 4. Timewaveform of coupled cubic maps. (a) $\alpha = -3.4505$, and $\epsilon = -0.062$. (b) $\alpha = -3.70$, and $\epsilon = 0.0375$. (c) $\alpha = -3.40$, and $\epsilon = -0.087$. (d) $\alpha = -3.61$, and $\epsilon = 0.0045$.

V. CONCLUSIONS

In this study, we compared the synchronization behaviors of cross-coupled chaotic circuits and the coupled chaotic maps. As a result, for the cross-coupled chaotic circuits, we could observe several synchronization phenomena by changing initial conditions. On the other hand, for the coupled chaotic maps, the two maps synchronized for the parameters giving periodic solutions. Clarifying the mechanism of the observed phenomena is our future work.

REFERENCES

[1] Y. Uchitani, R. Imabayashi and Y. Nishio, "State Transition Phenomenon in Cross-Coupled Chaotic Circuits," Proc. of NOLTA'07, pp. 397-400, Sep. 2007.

[2] Y. Uchitani and Y. Nishio, "Investigation of State Transition Phenomena in Cross-Coupled Chaotic Circuits," Proc. of ISCAS'08, pp. 2394-2397, May. 2008.

[3] Y. Uchitani and Y. Nishio, "Synchronization of Small Oscillations in Cross-Coupled Chaotic Circuits," Proc. of ISCAS'09, pp. 2629-2632, May. 2009.

[4] M. Shinriki, M. Yamamoto and S. Mori, "Multimode Oscillations in a Modified van der Pol Oscillator Containing a Positive Nonlinear Conductance," Proc. IEEE, vol. 69, pp. 394-395, 1981.

[5] N. Inaba, T. Saito and S. Mori, "Chaotic Phenomena in a Circuit with a Negative Resistance and an Ideal Switch of Diodes," Trans. of IEICE, vol. E70, no. 8, pp. 744–754, 1987.